INFLATABLE TENT

SIZE: 6M INFLATABLE TENT UMBRELLA

SCALE: 1:10

BINDING COLOR: _____

FABRIC: 500D POLYESTER

PRINTING: ☐ DYE-SUBLIMATION

☐ SILK SCREEN

PMS COLOR_____

_____

_____

_____

☐ HEAT PRESS

☐ WHITE ☐ RED

☐ BLACK ☐ ROYAL

* PLEASE CHECK ALL SPELLING, GRAMMAR AND PLACEMENT OF ART BEFORE SENDING

NOTE:

UNDERSIDE OF CANOPY TOP BACKSIDE OF SIDE WALL WILL BE UNPRINTED(WHITE)

ALIGNMENT OF ARTWORK THAT CROSSES STITCH CAN NOT GUARANTEED

WE RECOMMEND KEEPING IMPORTANT TEXT & LOGOS IN THE GREEN SQUARE

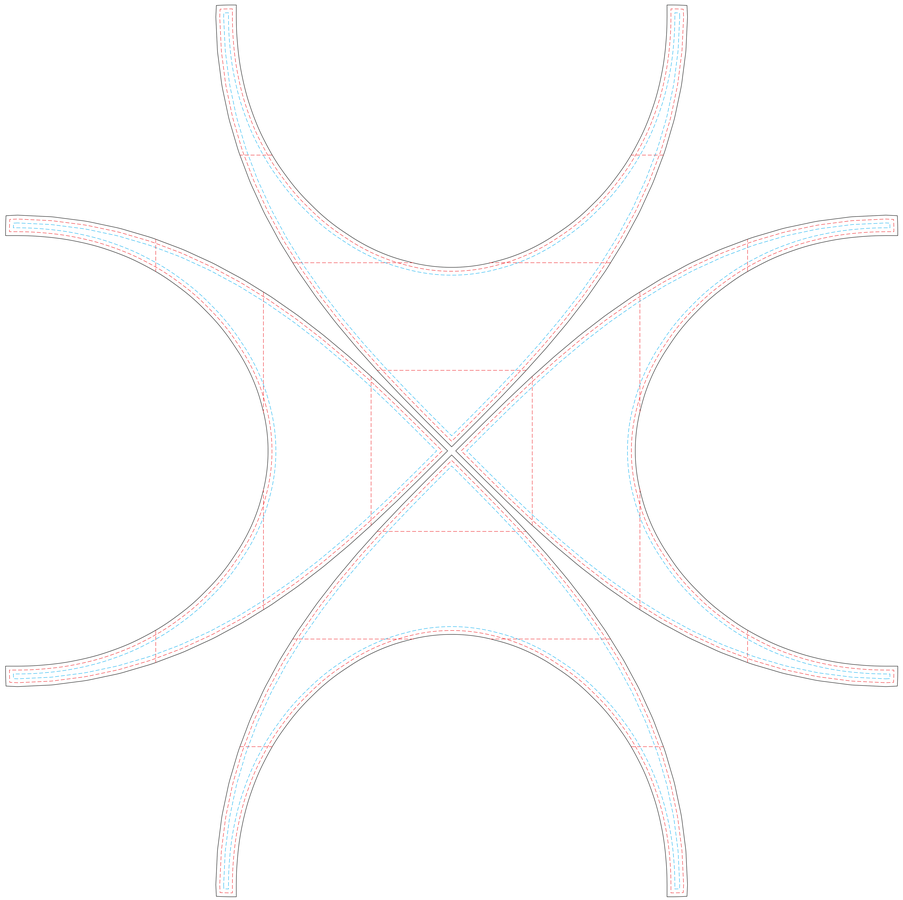

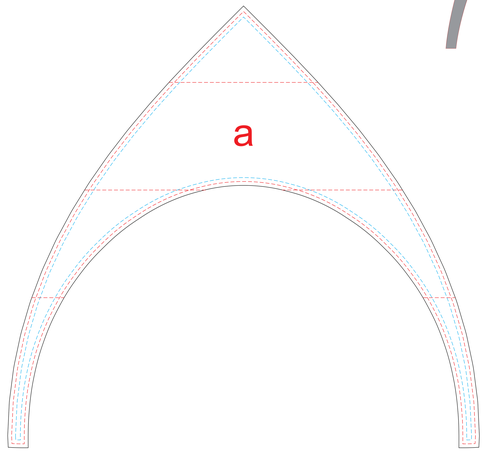

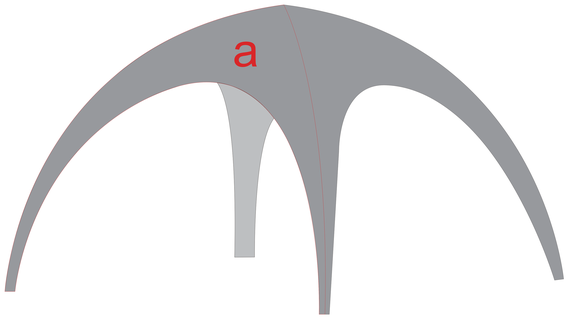

TEMPLATE KEY

= BLEED AREA

= FINISHED SIZE

= SAFE AREA

INFLATABLE TENT

SIZE: 6M INFLATABLE TENT FRAME

SCALE: 1:10

BINDING COLOR: _____

FABRIC: 500D POLYESTER

PRINTING: ☐ DYE-SUBLIMATION

☐ SILK SCREEN

PMS COLOR_____

_____

_____

_____

☐ HEAT PRESS

☐ WHITE ☐ RED

☐ BLACK ☐ ROYAL

* PLEASE CHECK ALL SPELLING, GRAMMAR AND PLACEMENT OF ART BEFORE SENDING

NOTE:

UNDERSIDE OF CANOPY TOP BACKSIDE OF SIDE WALL WILL BE UNPRINTED(WHITE)

ALIGNMENT OF ARTWORK THAT CROSSES STITCH CAN NOT GUARANTEED

WE RECOMMEND KEEPING IMPORTANT TEXT & LOGOS IN THE GREEN SQUARE

TEMPLATE KEY	
▭	= BLEED AREA
▭	= FINISHED SIZE
○	= LEATHER CIRCLES

x2

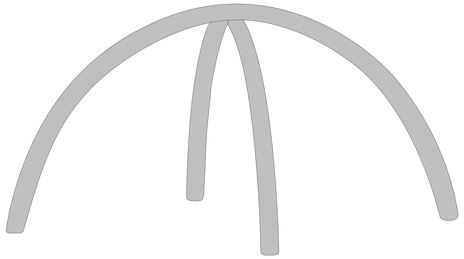

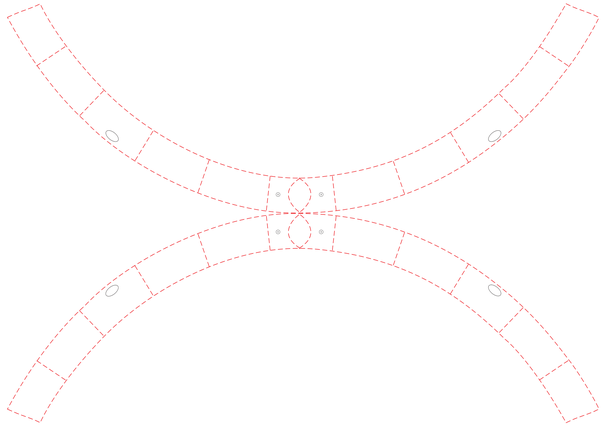

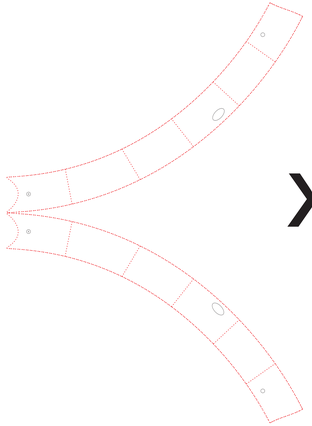

x2

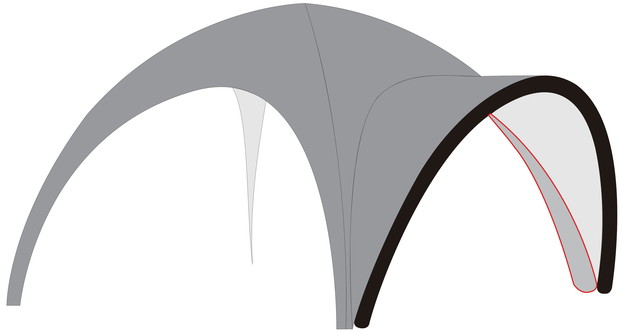

INFLATABLE TENT

SIZE: 6M INFLATABLE TENT FENCE

SCALE: 1:10

BINDING COLOR: X

FABRIC: 500D POLYESTER

PRINTING: ☐ DYE-SUBLIMATION

☐ SILK SCREEN

PMS COLOR_____

_____

_____

_____

☐ HEAT PRESS

☐ WHITE ☐ RED

☐ BLACK ☐ ROYAL

* PLEASE CHECK ALL SPELLING, GRAMMAR AND PLACEMENT OF ART BEFORE SENDING

NOTE:

UNDERSIDE OF CANOPY TOP BACKSIDE OF SIDE WALL WILL BE UNPRINTED(WHITE)

ALIGNMENT OF ARTWORK THAT CROSSES STITCH CAN NOT GUARANTEED

WE RECOMMEND KEEPING IMPORTANT TEXT & LOGOS IN THE GREEN SQUARE

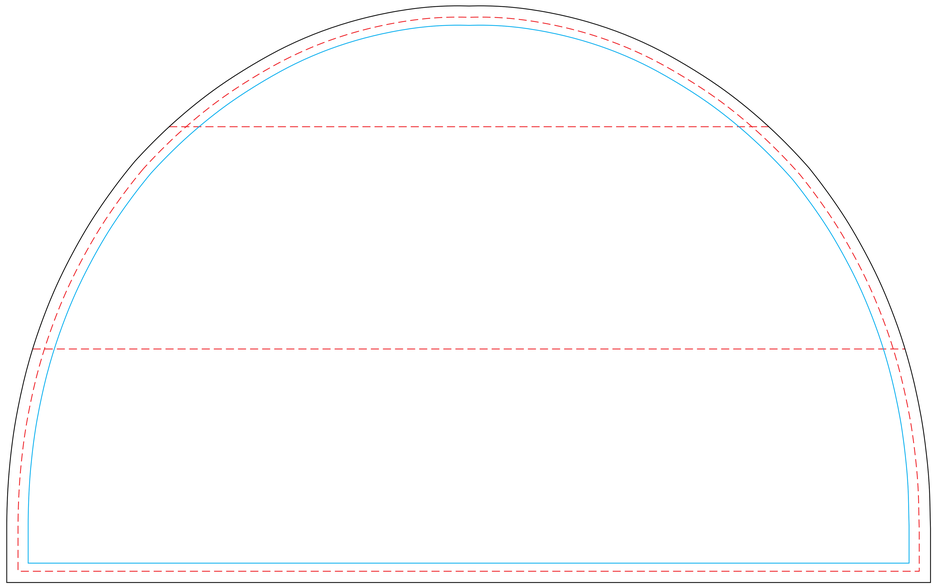

TEMPLATE KEY

= BLEED AREA

= FINISHED SIZE

= SAFE AREA

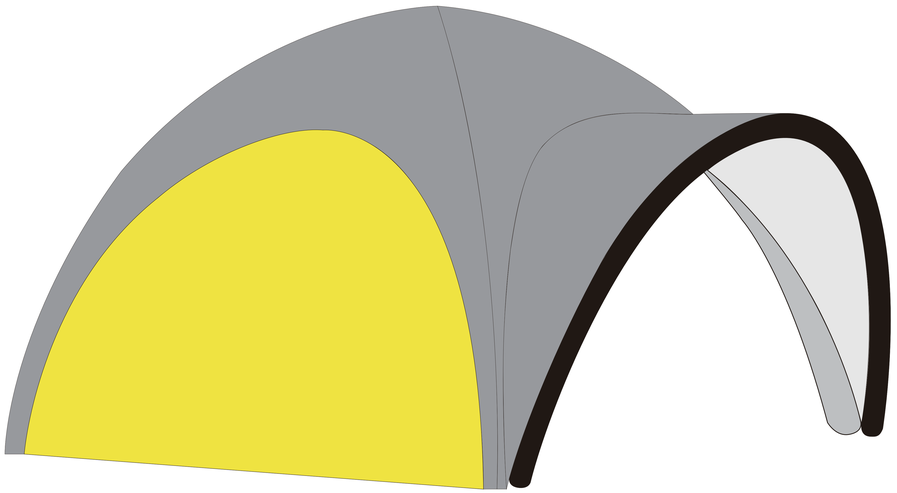

INFLATABLE TENT

SIZE: 6M INFLATABLE TENT WINDOW FENCE

SCALE: 1:10

BINDING COLOR: X

FABRIC: 500D POLYESTER

PRINTING: ☐ DYE-SUBLIMATION

☐ SILK SCREEN

PMS COLOR_____

_____

_____

_____

☐ HEAT PRESS

☐ WHITE ☐ RED

☐ BLACK ☐ ROYAL

* PLEASE CHECK ALL SPELLING, GRAMMAR AND PLACEMENT OF ART BEFORE SENDING

NOTE:

UNDERSIDE OF CANOPY TOP BACKSIDE OF SIDE WALL WILL BE UNPRINTED(WHITE)

ALIGNMENT OF ARTWORK THAT CROSSES STITCH CAN NOT GUARANTEED

WE RECOMMEND KEEPING IMPORTANT TEXT & LOGOS IN THE GREEN SQUARE

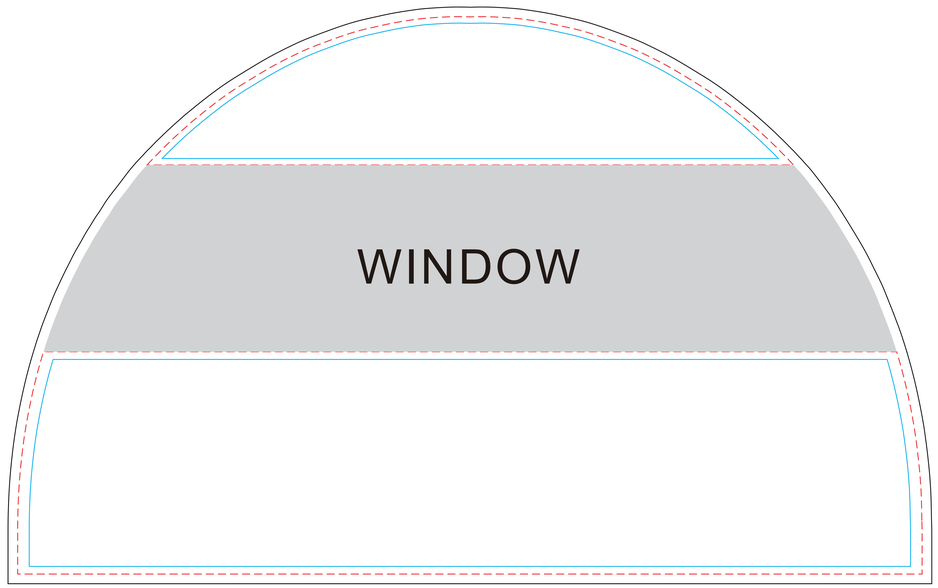

TEMPLATE KEY

= BLEED AREA

= FINISHED SIZE

= SAFE AREA

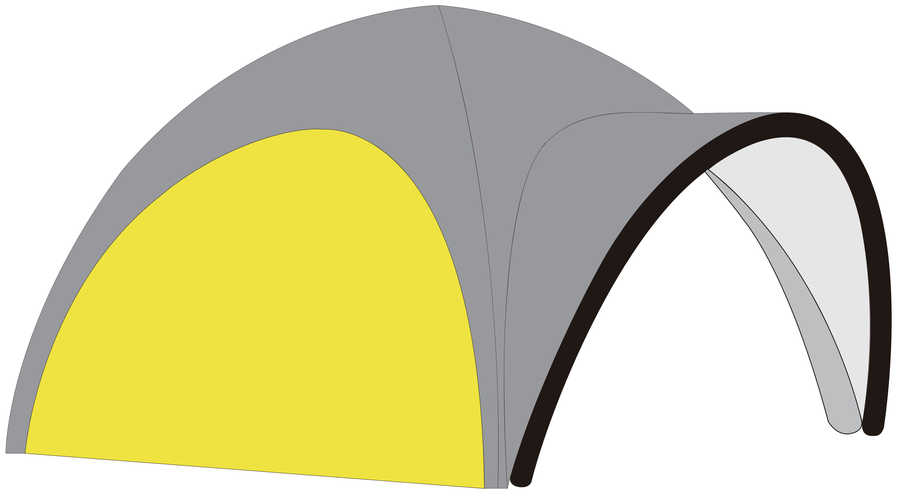

INFLATABLE TENT

SIZE: 6M INFLATABLE TENT ZIPPER FENCE

SCALE: 1:10

BINDING COLOR: X

FABRIC: 500D POLYESTER

PRINTING: ☐ DYE-SUBLIMATION

☐ SILK SCREEN

PMS COLOR_____

_____

_____

_____

☐ HEAT PRESS

☐ WHITE ☐ RED

☐ BLACK ☐ ROYAL

* PLEASE CHECK ALL SPELLING, GRAMMAR AND PLACEMENT OF ART BEFORE SENDING

NOTE:

UNDERSIDE OF CANOPY TOP BACKSIDE OF SIDE WALL WILL BE UNPRINTED(WHITE)

ALIGNMENT OF ARTWORK THAT CROSSES STITCH CAN NOT GUARANTEED

WE RECOMMEND KEEPING IMPORTANT TEXT & LOGOS IN THE GREEN SQUARE

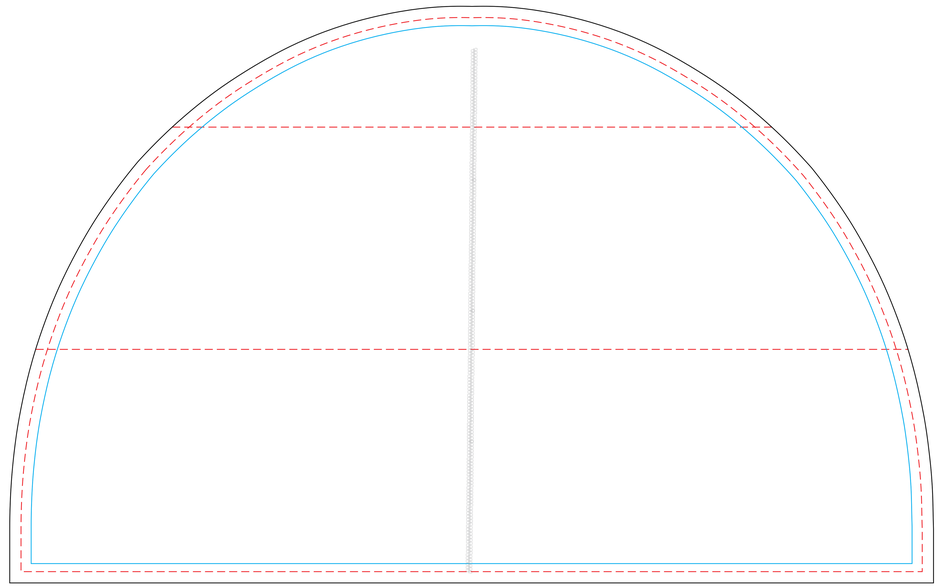

TEMPLATE KEY

= BLEED AREA

= FINISHED SIZE

= SAFE AREA

INFLATABLE TENT

SIZE: 6M INFLATABLE TENT CANOPY

SCALE: 1:10

BINDING COLOR: _____

FABRIC: 500D POLYESTER

PRINTING: ☐ DYE-SUBLIMATION

☐ SILK SCREEN

PMS COLOR_____

_____

_____

_____

☐ HEAT PRESS

☐ WHITE ☐ RED

☐ BLACK ☐ ROYAL

* PLEASE CHECK ALL SPELLING, GRAMMAR AND PLACEMENT OF ART BEFORE SENDING

NOTE:

UNDERSIDE OF CANOPY TOP BACKSIDE OF SIDE WALL WILL BE UNPRINTED(WHITE)

ALIGNMENT OF ARTWORK THAT CROSSES STITCH CAN NOT GUARANTEED

WE RECOMMEND KEEPING IMPORTANT TEXT & LOGOS IN THE GREEN SQUARE

TEMPLATE KEY

= BLEED AREA

= FINISHED SIZE

= INFLATION VALVE

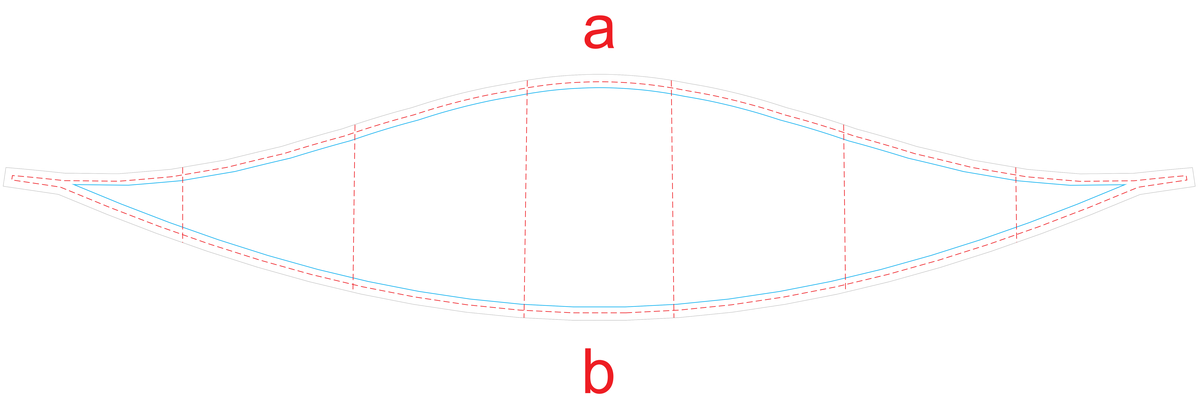

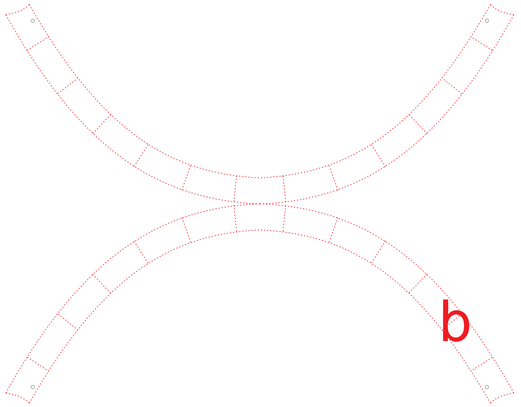

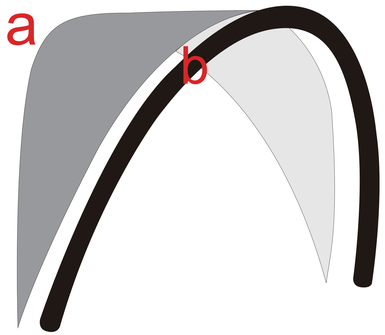

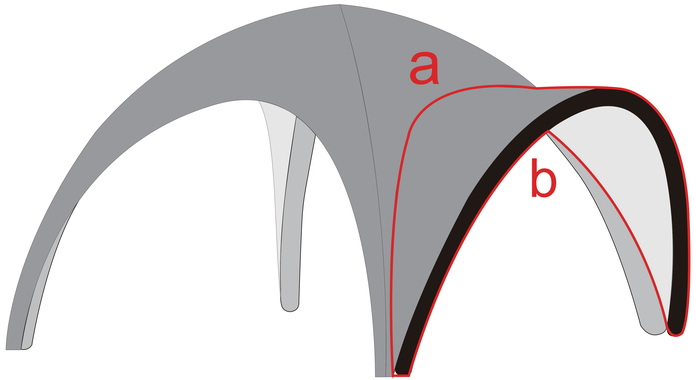

INFLATABLE TENT

SIZE: 6M INFLATABLE TENT CONNECTING CLOTH

SCALE: 1:10

BINDING COLOR: _____

FABRIC: 500D POLYESTER

PRINTING: ☐ DYE-SUBLIMATION

☐ SILK SCREEN

PMS COLOR_____

_____

_____

_____

☐ HEAT PRESS

☐ WHITE ☐ RED

☐ BLACK ☐ ROYAL

* PLEASE CHECK ALL SPELLING, GRAMMAR AND PLACEMENT OF ART BEFORE SENDING

NOTE:

UNDERSIDE OF CANOPY TOP BACKSIDE OF SIDE WALL WILL BE UNPRINTED(WHITE)

ALIGNMENT OF ARTWORK THAT CROSSES STITCH CAN NOT GUARANTEED

WE RECOMMEND KEEPING IMPORTANT TEXT & LOGOS IN THE GREEN SQUARE

TEMPLATE KEY

= BLEED AREA

= FINISHED SIZE
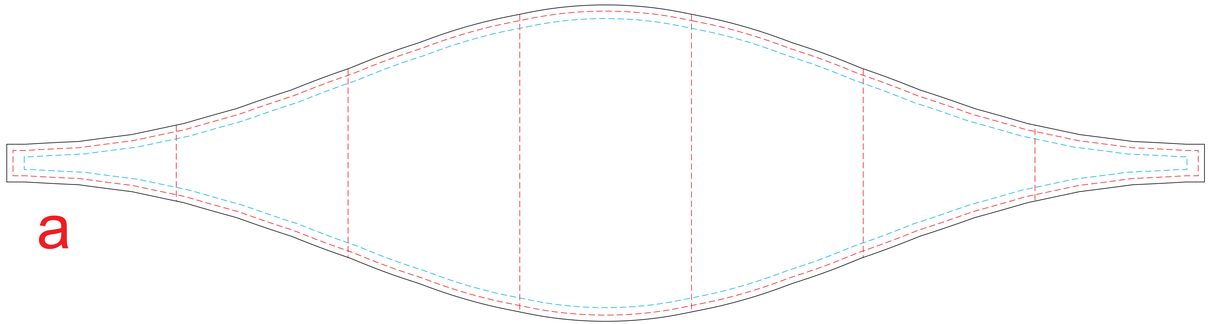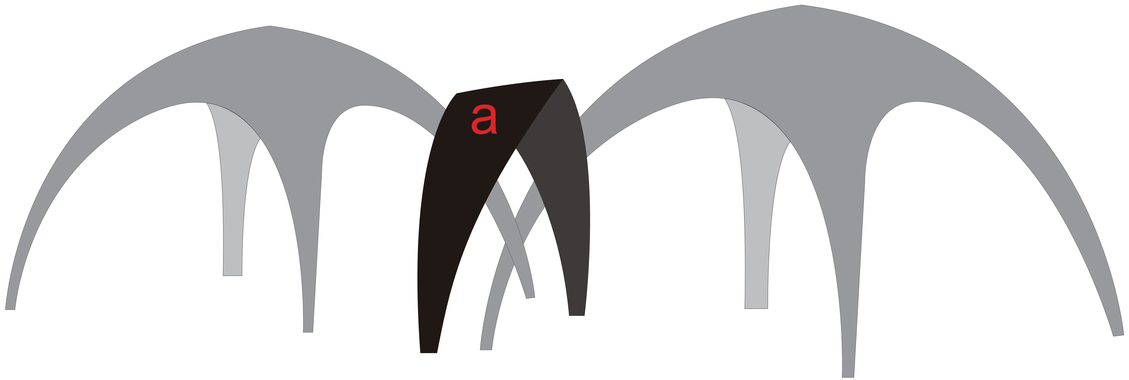
= SAFE AREA